Roll No. | | | | | | | |

End Semester Examination June 2025

Name of the Course: B. Tech (ECE)
Name of the Paper: Analog Integrated Circuit
Time: 3 Hours

Semester: IV
Paper Code: **TEC 402**
Maximum Marks: 100

Note:-

(i) All questions are compulsory.
(ii) Answer any two sub questions among a, b & c in each main question
(iii) Total marks in each main question are twenty.
(iv) Each question carries 10 marks

Q1	(20marks)	CO1
(a)	**Perform AC and DC analysis of single input balanced output differential amplifier with proper diagram.**	
(b)	**Explain constant current bias circuit with a detailed circuit description. Also write its applications.**	
(c)	**The following specifications are given for the dual input balanced output differential amplifier:** R_c **= 4.2 kΩ,** R_E**= 6.7 kΩ,** R_{in1}**=** R_{in2}**= 75Ω,** $+V_{cc}$**=15V,** $-V_{EE}$ **=-15V with ß values are 200 and** V_{BE}**=0.715V. Determine (i)** I_{CQ} **and** V_{CEQ} **(ii) Voltage gain (ii) input output resistance**	
Q2	(20 marks)	CO2
(a)	**Explain and derive an expression for voltage gain in negative feedback amplifier.**	
(b)	**Explain in detail about the differential amplifier using (i) One Op-Amp (ii) Two Op-Amps.**	
(c)	**Calculate Vo and Io for** V_a**=2 V and** V_b**= 14 V** 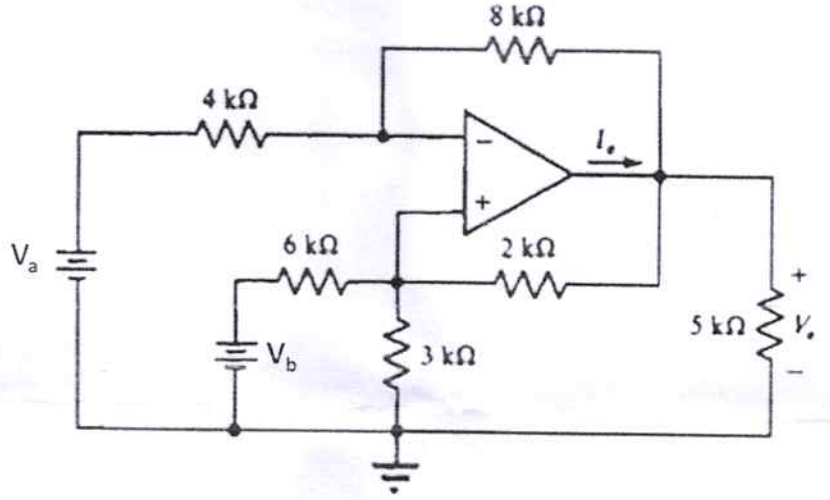	
Q3	(20 marks)	CO3
(a)	**With the help of suitable diagram explain in detail about Logarithmic and Antilog Amplifier using Op Amp.**	
(b)	**Calculate Vo for the circuit below. For a saturation voltage ±15V, find the feedback resistance** R_f **for which the op-amp will saturate.**	

	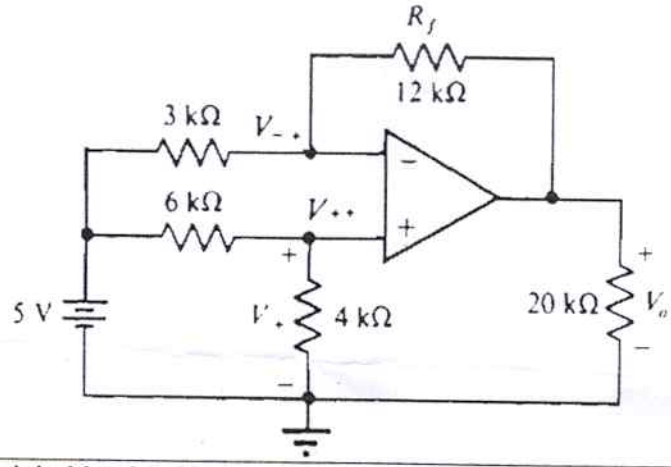	
(c)	Explain bistable Multivibrator in detail.	
Q4	(20 marks)	CO3 and CO4
(a)	Explain RC Phase shift oscillator and prove that $R_f=29R_1$.	
(b)	Design a (i) second order high pass filter for lowest cutoff frequency of 2 kHz and (ii) First order low pass filter at a highest cutoff frequency of 1 kHz and passband gain 3.	
(c)	Explain narrow band pass filter and design a Wein Bridge oscillator of oscillation frequency 965 Hz.	
Q5	(20 marks)	CO5 and CO6
(a)	Explain in detail about IC voltage regulators and their types.	
(b)	Using 7805 voltage regulator, design a current source that will deliver a 0.75 A current to 72 Ω resistor.	
(c)	What are the industrial applications of Op-Amp?	